C Channel 21x41

Perforated

Non-Perforated

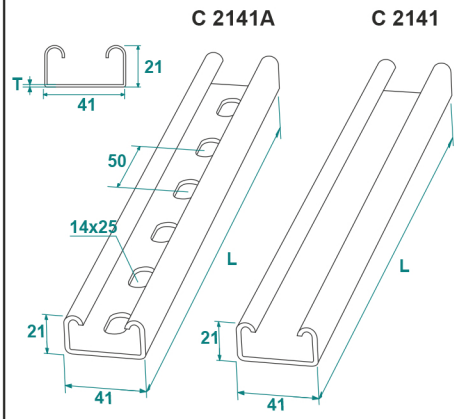

Pre-Galvanised

C 2141A L:3000				
CODE	Thickness T mm	Length L mm	kg 1 m	pcs
	1,2	3000	0.85	1
	1,5	3000	1.05	1
	2,0	3000	1.45	1
	2,5	3000	1.80	1

		Z - Z AXIS			Y - Y AXIS		
C 2141A	Unit	1,5	2,0	2,5	1,5	2,0	2,5
Moment of Inertia	cm^4	3,34	4,25	5,07	0,7	0,88	1,03
Section Modulus	cm^3	1,68	1,88	2,59	0,6	0,75	0,89
Allowable Bending Stress	kN/cm^2	21,82	21,82	21,82	21,82	21,82	21,82